Regency 80
Assembly instructions

Aqua One®

Parts Required Contents:

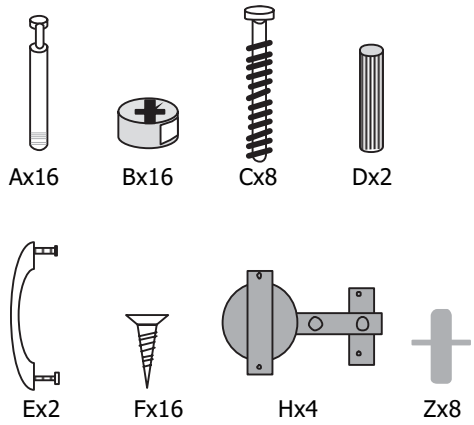

Tools required:

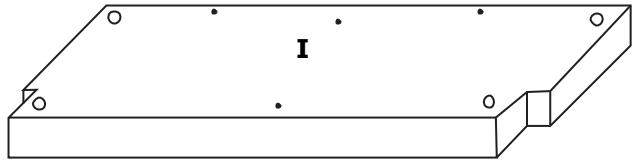

Base x 1

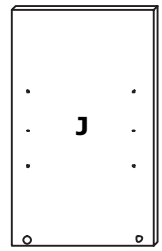

Centre Panel x 1

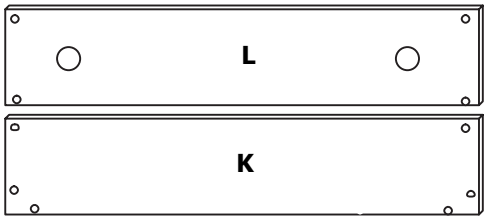

Top back panel x 1

Lower back panel x 1

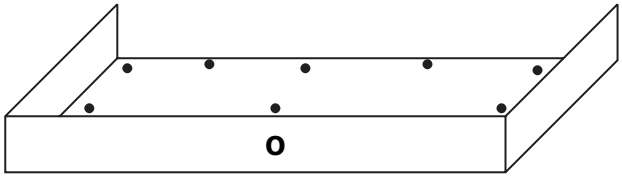

Top of Cabinet

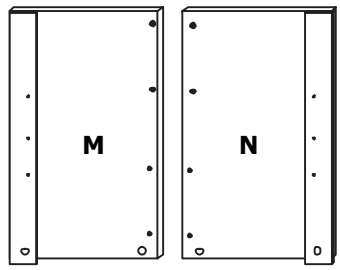

Left side x 1 Right side x 1

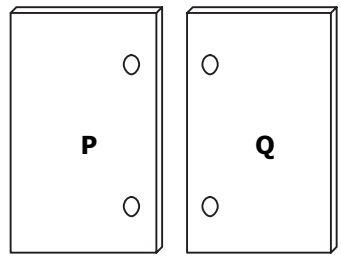

Left door x 1 Right door x 1

Shelves x 2

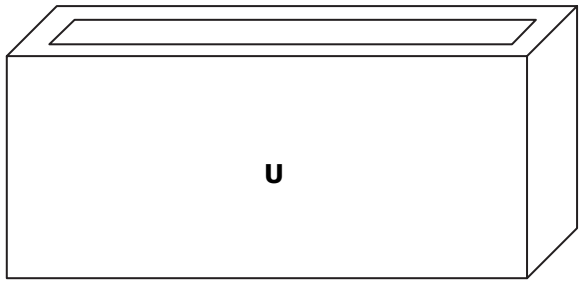

Glass Aquarium x 1

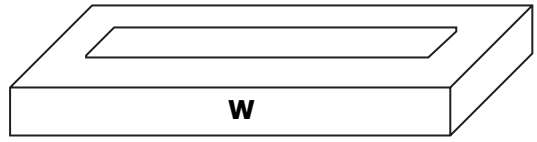

Hood x 1

Glass tray x 1

Glass Lids x 2

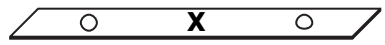

Hood Insert x 1

Step 1: Base I and 4 x A
4 x B

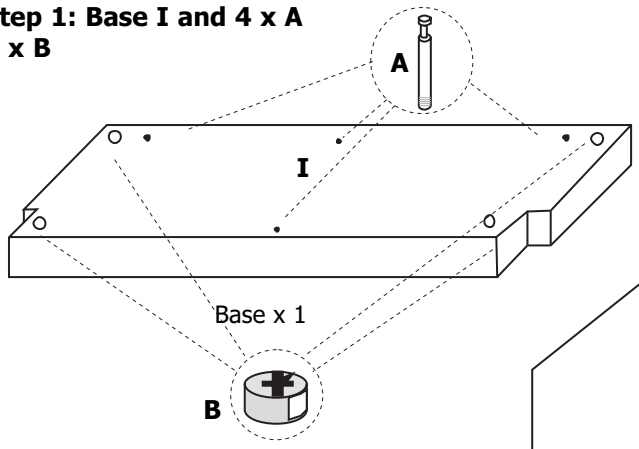

Make sure arrow points towards opening for screw

Centre Support Panel J and 2 x B

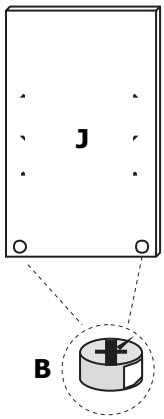

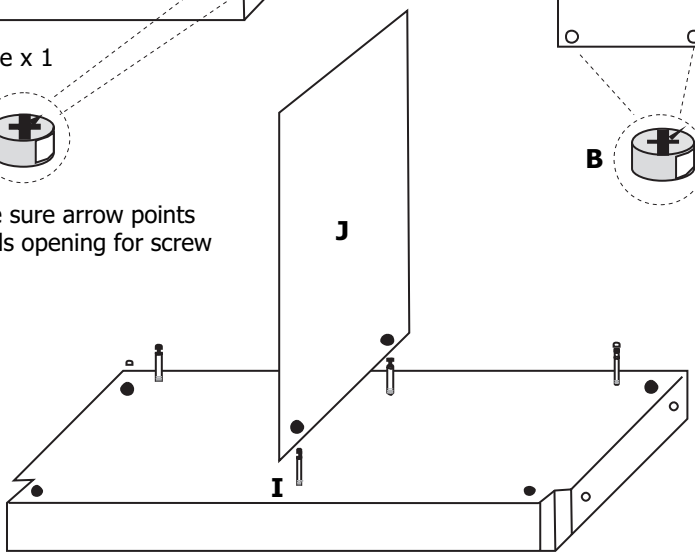

Lower centre shelf onto screws and tighten clamps by turning them clockwise. Do not overtighten.

Step 2: Back Panels L, K, 2 x D and 10 x B

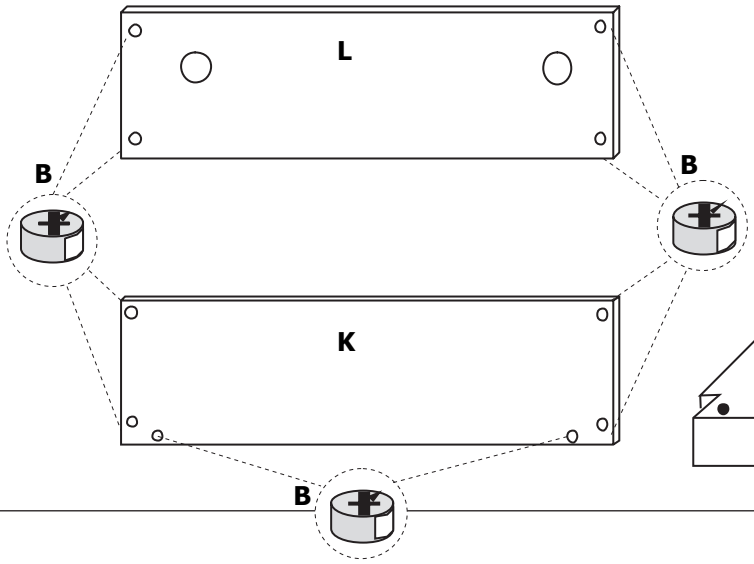

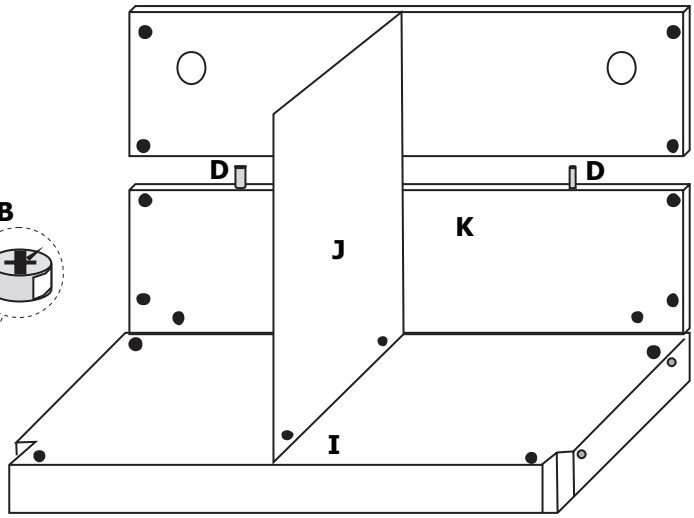

Step 3: Side Panels M, N, 12 x A

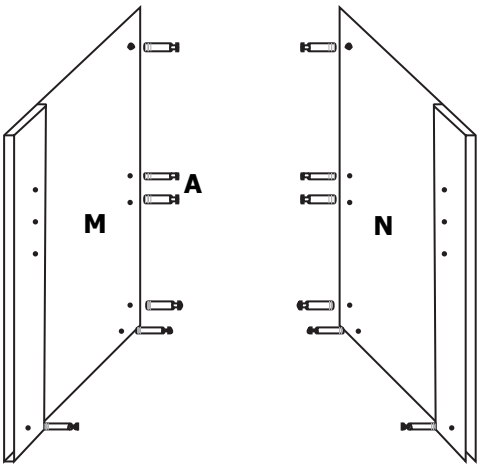

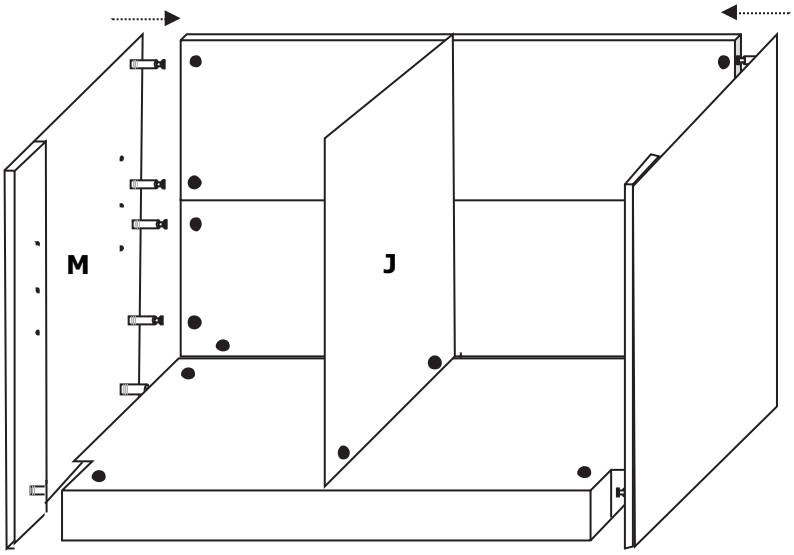

Step 4: Cabinet lid O and 8 x C

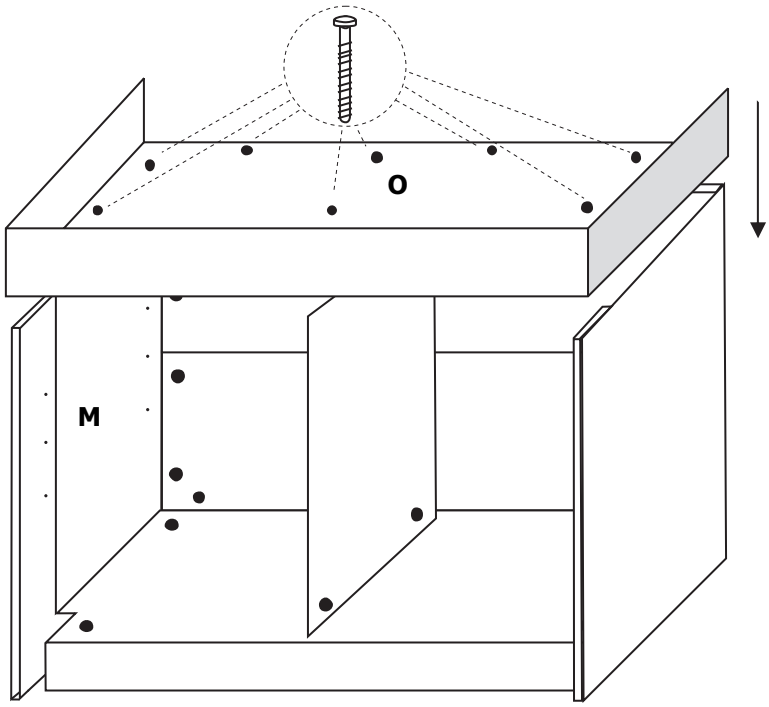

Position cabinet lid on the cabinet construction, open side pointing upwards. Line up screws C with holes and fasten, ensuring screw heads do not stand proud.

Step 5: Door panels P, Q, 4 x H, 16 x F

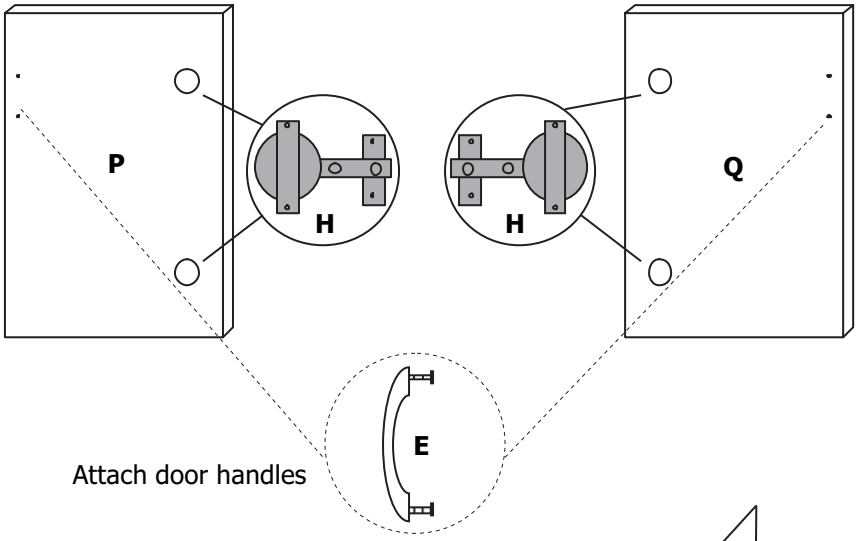

Fasten hinges H to door panels using screws F

Attach door handles

Attach doors to cabinet using screws F and the predrilled holes

Insert shelves using pins Z

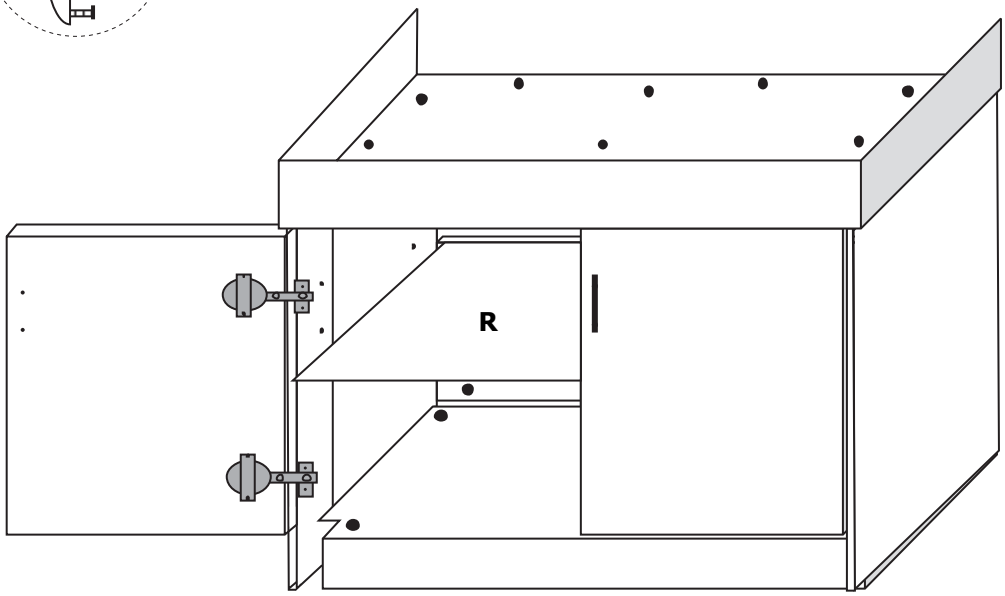

Step 6: Hood W, aquarium U and cabinet

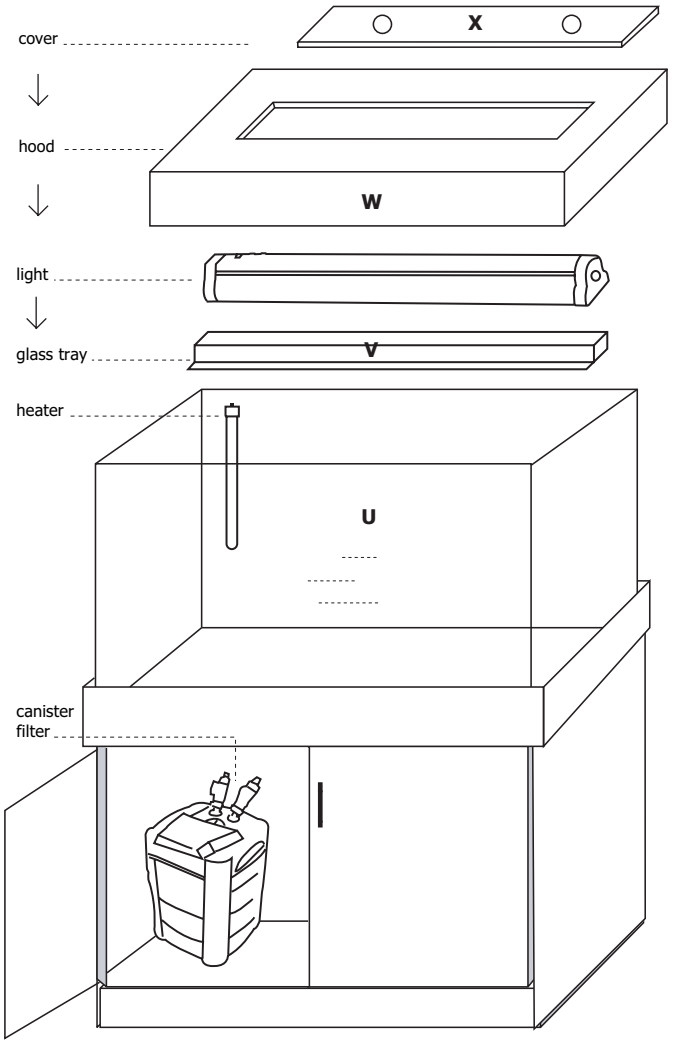

Place aquarium **U** on top of cupboard **by lifting it on from the back and sliding it forward.**

VERY IMPORTANT: DO NOT REMOVE THE POLYSTYRENE ATTACHED TO THE BOTTOM OF THE AQUARIUM!

Install Filter (see filter instructions for details)

Install Heater (see heater instructions for details)

Put glass tray **V** on top of aquarium.

Install reflector lighting (see lighting instructions for details)

Slide hood **W** onto aquarium. Insert maintenance lid **X** into the hood.

Important Notice

It is absolutely imperative that you ensure this cabinet and aquarium is installed upon level flooring. It is also a prerequisite that you ensure the flooring upon which it is positioned is able to support the weight of this aquarium which could be up to **600kg** including water and decorations.

Installation upon uneven flooring will result in poor distribution of weight. Damages to the aquarium, cabinet or equipment and damages caused by leaks due to improper or uneven installation are not covered by the guarantee with this product.

Care and Maintenance of your Aqua One Aquarium

Glass: It is recommended that you use a good quality glass cleaner and a non abrasive lint free cloth. Glass cleaner should only be used on the outside of the aquarium.

To clean the glass on the inside of the aquarium, it is recommended that you use an Aqua One Scraper or Magnetic Cleaner (available from your local Aqua One dealer).

Cabinet and Hood: The use of a damp cloth is recommended, do not use any detergents or harsh chemicals to clean the cabinet and hood as damage may occur.

Precision Manufactured in the P.R.C.
Designed in Australia by Aqua One
Distributed in Australia by:
Kong's (Aust.) Pty. Limited
48 Williamson Rd. Ingleburn.
2565 NSW Australia.

Distributed in New Zealand by:
Kong's (NZ) Limited
52 Glenlyon Avenue.
Greerton. Tauranga New Zealand.

Distributed in the UK by:
Kong's (UK) Ltd.
C/O Aqua Pacific UK Ltd.
PO Box 268
Romsey Hampshire
S051 0WW
United Kingdom

® Aqua One and Kong's are registered trademarks. www.aquaone.com.au. © Aqua One 2004